Part Number: 250-8109

Kit Contents

Item	Qty	Description
1	1	Camera Assembly
2	1	Tundra Camera Interface Harness
3	1	Hardware Bag
4	1	Owners Card
5		
6		
7		
8		
9		
10		

Hardware Bag Contents

Item	Qty	Description
1	5	Wire Ties
2	2	Adhesive Foam
3	2	Alcohol Pads
4	1	Adhesive Harness Clip
5	1	Tailgate Removal Card
6	1	Plastic Resealable Bag
7		
8		
9		
10		

Additional Items Required for Install

Item	Qty	Description
1	n/a	Electrical Tape
2		
3		
4		

Conflicts

Note:

Recommended Tools

Safety Tools	
Special Tools	
Installation Tools	
Fastener Removal Tool	Wire Cutters
Trim Removal Tool	Pliers
T-20 Torx Driver	
Special Chemicals	

Color Applicability/Trim Level

Vehicle Trim Color \ Accessory Color														

General Applicability

All Models

Recommended Sequence Of Application

* Mandatory

Legend

STOP: Damage to vehicle may occur. Do Not Proceed until process compliance has been met.

OPERATOR SAFETY: Use Caution to Avoid Risk of Injury.

CRITICAL PROCESS: Proceed with Caution to Ensure a Quality Installation. These points will be audited on a completed vehicle installation.

GENERAL PROCESS: This highlights specific processes to ensure a quality installation. these points will be audited during the accessory installation.

TOOLS & EQUIPMENT: This calls out the specific tools and equipment required for the process.

REVISION MARK: This mark highlights a change in installation with respect to previous issue.

Special Note: Installation Sequences

After **Safety** mandated preparatory steps have been taken, the installation sequence is the suggested method for completing the accessory installation. In some instances the suggested sequence is written for one associate to install and in others the sequence is given as part of a team accessory installation. Unless otherwise stated in the document, the associates may perform the installation steps in any order to make the installation as efficient as possible while maintaining consistent quality.

PARTS IDENTIFICATION

Item	Quantity	Part Number	Description
1	1	250-8540	Camera Assembly
2	1	250-8027	Camera Interface Harness
3	1	250-8028	Sack Parts: Tie Straps, Alcohol Pads, Foam Tape

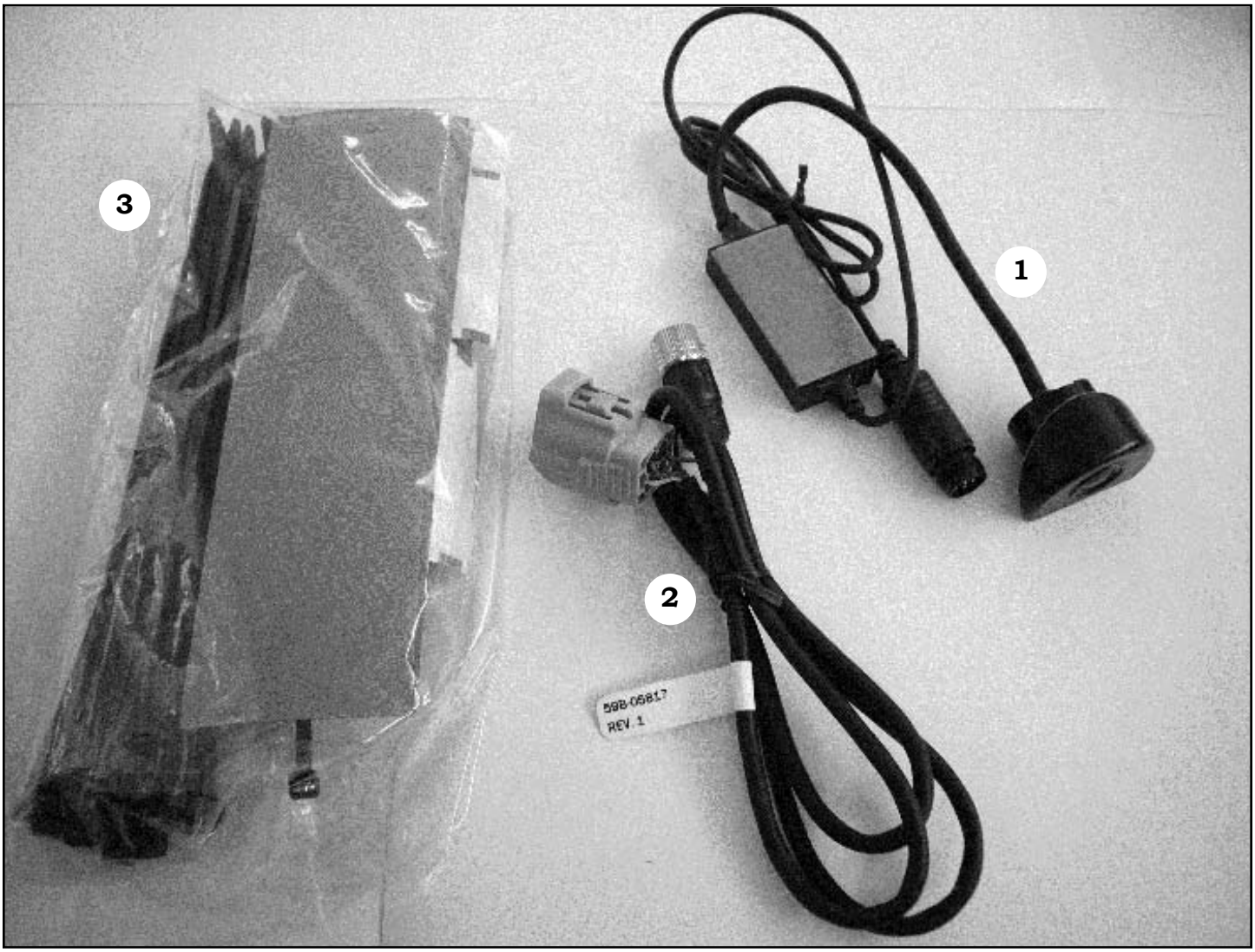

***Before** beginning installation, **familiarize** yourself with the installation instructions and the **RearSight™** back-up camera system components.

INSTALLATION

***CAUTION:** It is advisable to disconnect the negative battery cable for 3 minutes before beginning installation, to avoid unintended air bag deployment. Note and record any anti-theft radio codes prior to disconnecting.*

Vehicle Preparation

1. Remove the tail gate hole service cover by removing eight **(8)** Torx-30 screws. **Figure 1**

2. Disconnect the latch mechanism control rods from the latch by unsnapping the four **(4)** orange and purple clips. **Figure 2**

3. Remove the two **(2)** 8mm bolts on holding the latch to the tailgate and remove the latch. **Figure 3-4.**

Camera Installation

1. Cut out the camera hole drilling template on page 5 of this manual. Affix it to the tail gate latch as shown in **Figure 5.** Drill a 1/4" pilot hole and then enlarge it to 1-1/16". Clean and de-burr the hole.

2. Insert the RearSight camera into the hole to check for fitment. **DO NOT** remove the lining on the tape of the camera shroud yet. If the camera won't fit flush with the latch, use a knife to chamfer the inner edge of the hole so that the camera will fit. Clean the outside area around the hole with the supplied alcohol pad and then mount the camera to the latch using the mounting tape. Mount the latch into the tailgate. **Figures 6-7**

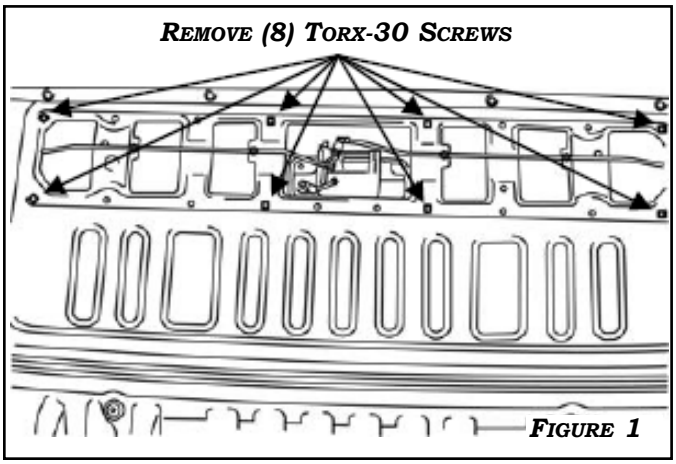

Figure 1

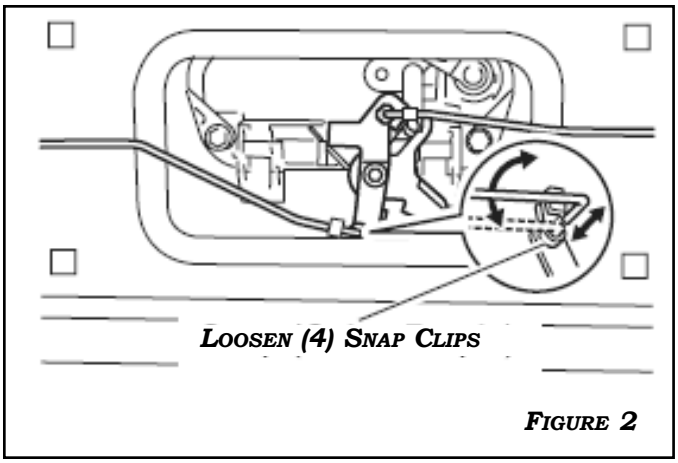

Figure 2

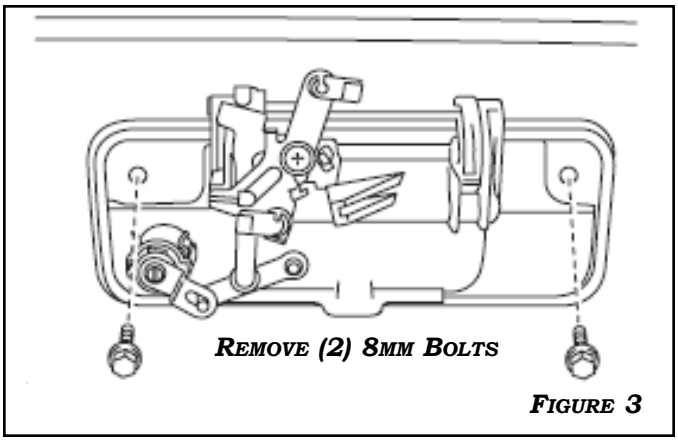

Figure 3

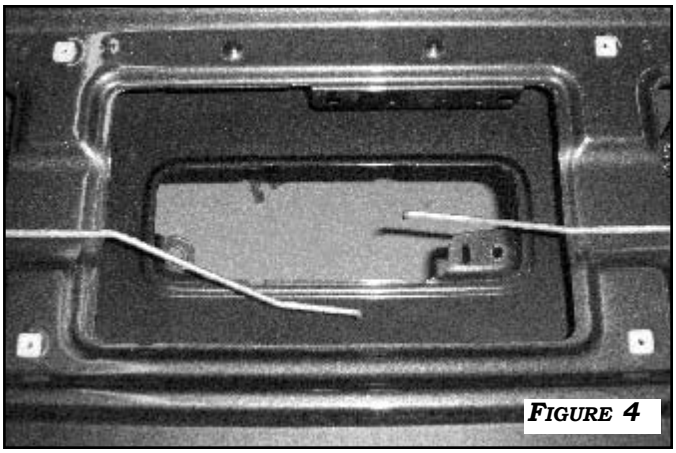
Figure 4

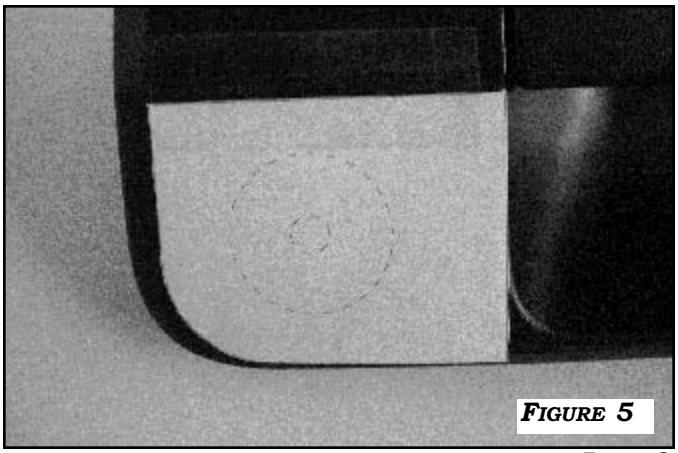
Figure 5

INSTALLATION

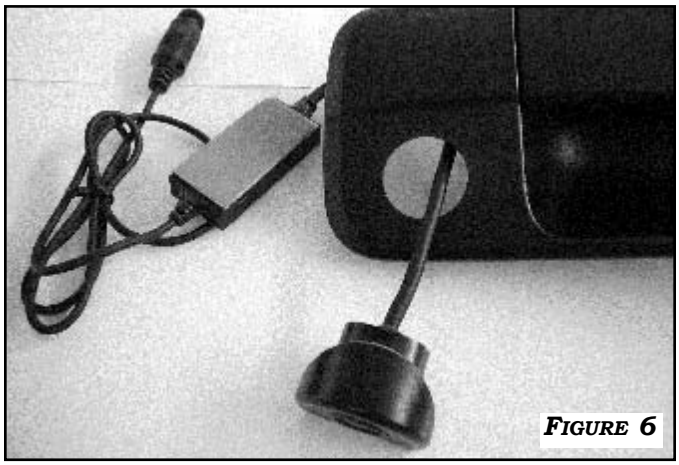

FIGURE 6

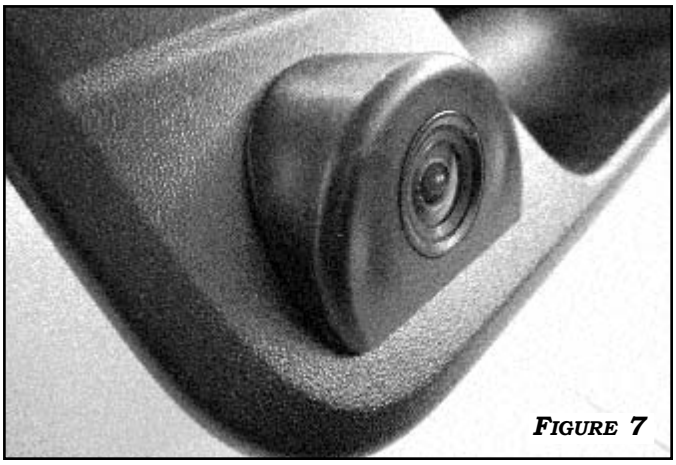

FIGURE 7

ROUTING HARNESS AND POWER CONNECTIONS

1. CLEAN THE AREA SHOWN IN **FIGURE 8** WITH ALCOHOL AND MOUNT THE CAMERA PCB TO THIS SPOT USING THE DOUBLE-SIDED TAPE. SECURE THE HARNESS WITH WIRE TIES AS SHOWN. ROUTE THE CAMERA HARNESS TO THE RIGHT OF THE TAILGATE, SECURING WITH WIRE TIES AS SHOWN IN **FIGURE 9**. CONNECT THE CAMERA HARNESS TO THE TAILGATE INTERFACE HARNESS BY SCREWING THE TWO CONNECTORS TOGETHER. SECURE THE CONNECTOR TO THE TAILGATE WITH FOAM TAPE TO PREVENT RATTLES. **FIGURE 10**

2. ROUTE THE TAILGATE INTERFACE HARNESS TO THE HOLE AT THE BOTTOM RIGHT SIDE OF THE TAILGATE. PULL THE CONNECTOR THROUGH, THEN INSERT ROUTE THE HARNESS UNDER THE BED THROUGH THE SECOND HOLE AS SHOWN IN **FIGURE 11.** CLEAN THE AREA WITH ALCOHOL THEN ATTACH THE SUPPLIED ADHESIVE HARNESS CLIP TO THE BOTTOM OF THE TAILGATE TO SECURE THE HARNESS AS SHOWN IN **FIGURE 11**.

3. CONNECT THE INTERFACE HARNESS TO THE VEHICLE CAMERA CONNECTOR (XR1) UNDER THE BED AS SHOWN IN **FIGURE 12**. REMOVE THE DUMMY PLUG FIRST, AND PLACE IT IN THE SUPPLIED PLASTIC RESEALABLE BAG ALONG WITH THE TAILGATE REMOVAL WARNING CARD.

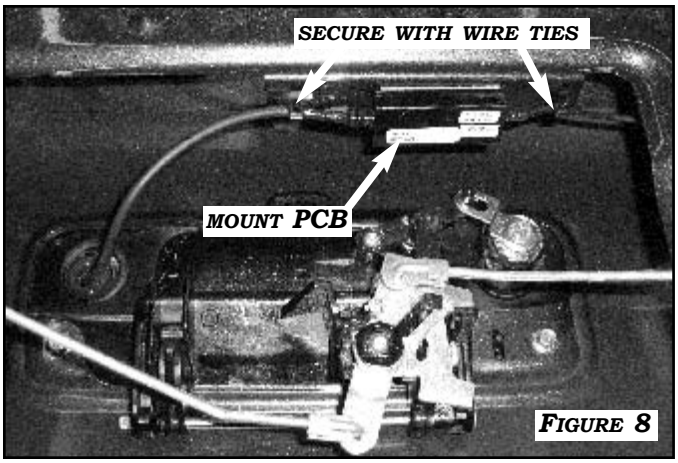

FIGURE 8

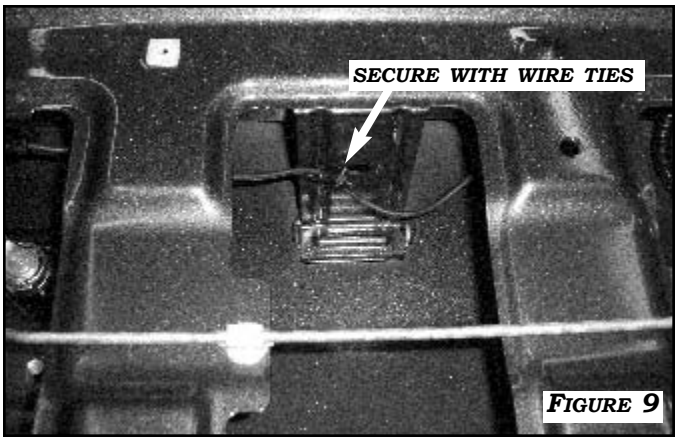

FIGURE 9

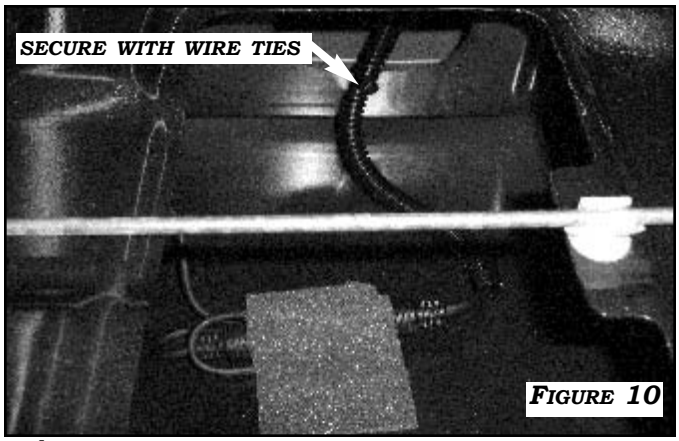

FIGURE 10

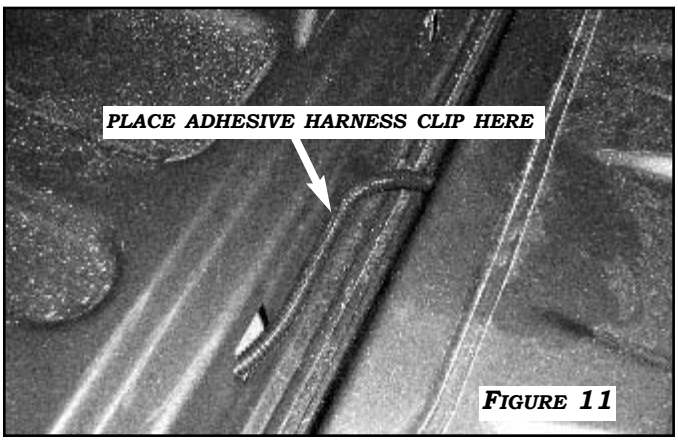

FIGURE 11

TESTING AND REASSEMBLY

TESTING

1. Reconnect Negative Battery Cable and torque to **3 ft*lbs**. Re-enter any theft deterrent information, if applicable.

2. Turn the ignition switch **on**. Put the vehicle in reverse. Verify that the RearSight Monitor is on and that the camera's picture appears.

3. If there is no picture, verify all connections are secure.

REASSEMBLY

1. Reinstall all trim pieces taking special care to ensure harnesses and wiring connections are properly secured.

2. Be sure harness is not pinched or bound by trim pieces.

3. Place the Owner's card and Tailgate Removal card bag in the glove box.

4. Reconnect all disconnected bulbs and check for function.

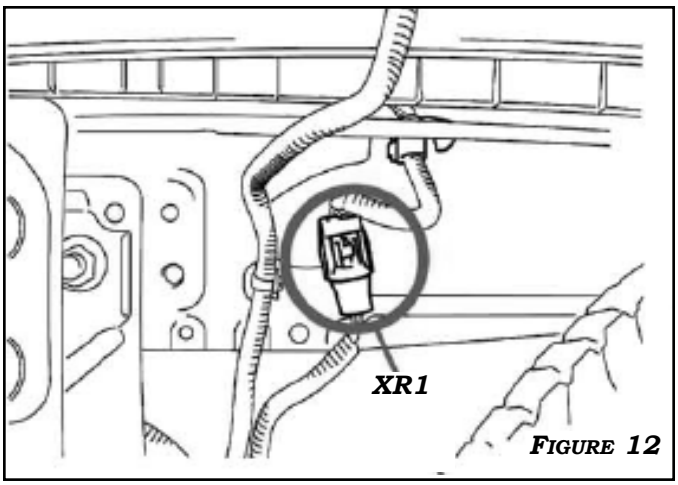

Figure 12

Figure 12

CAMERA TEMPLATE

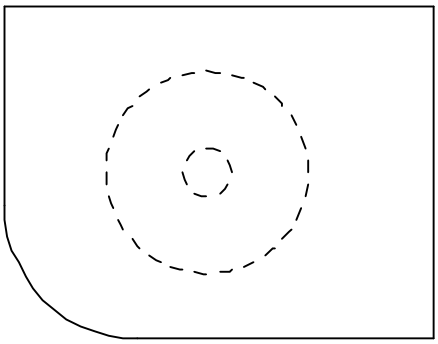

Cut out this template. Use center hole for pilot. Finished hole size should be 1-1/16"

NOTES

NOTES

ROSTRA.COM